

STELLA



Stella



STS-WHT-107953SPPSM

Rimless Wall Hung WC

Price: 7300.00 INR

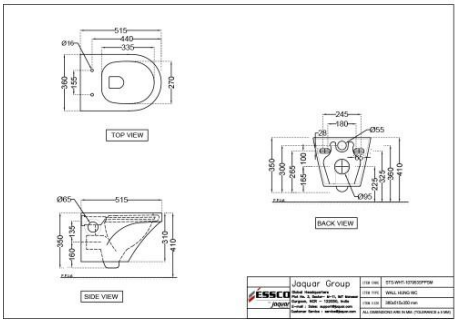

STS-WHT-107901

Table Top Basin

Price: 2875.00 INR

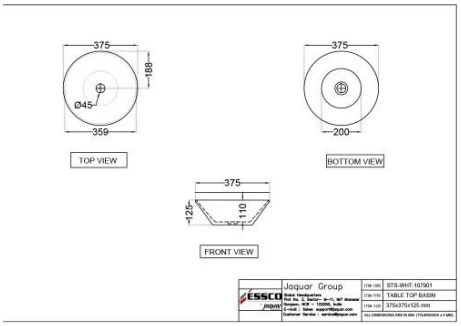



STS-WHT-107903

Table Top Basin

Price: 2825.00 INR

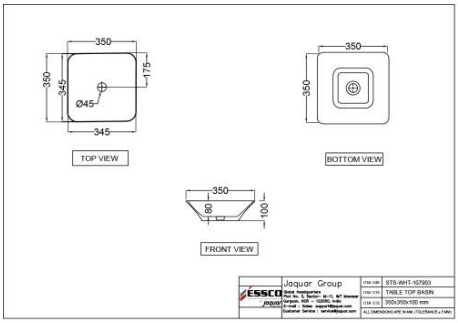

Stella

STS-WHT-107905

Table Top Basin

Price: 3250.00 INR

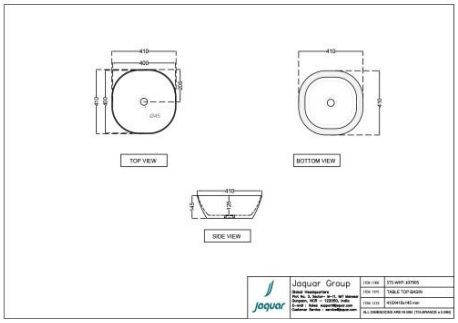

Disclaimer

- Jaquar reserves the right at its sole discretion, to change/modify/alter any product specification at any time without notice, where improvement can be effected in design, development and dimensions.
- Although the information shown in this catalogue is updated to the extent possible but the same may vary. It is advisable to consult our local representative or check in a period manner for latest technical and other updates.
- The prices are subject to change without notice and those ruling at the time of supply will be charged.
- Colours &sizes of product images shown in the Website may vary in reality