ÉSSCO BY Jaquar GROUP

ASPIRE



Aspire



AIS-WHT-101551PSPPSM

EWC With PP Soft Close Slim Seat Cover

Price: 4750.00 INR

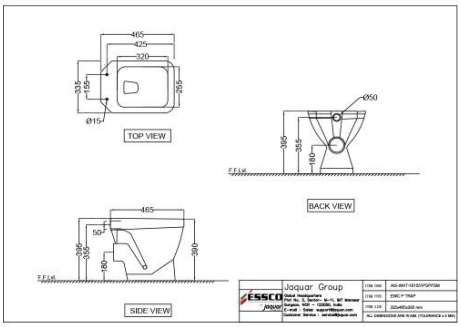



AIS-WHT-101855S300SPPSMY

Rimless Single Piece WC

Price: 14300.00 INR

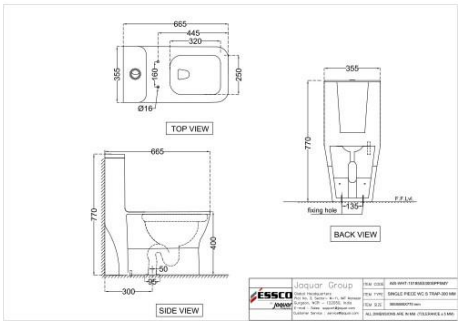



AIS-WHT-101855S220SPPSMY

Rimless Single Piece WC

Price: 14300.00 INR

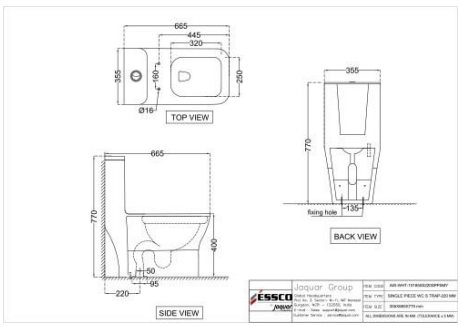

Aspire



AIS-WHT-101855P180SPPSM

Rimless Single Piece WC

Price: 14300.00 INR

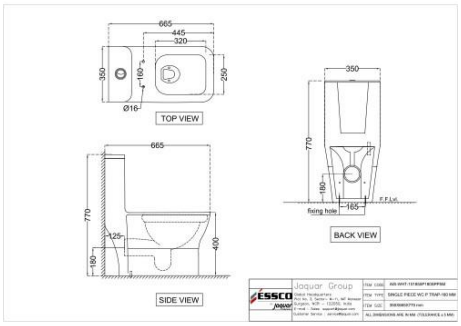



AIS-WHT-101951SPPSM

Wall Hung WC

Price: 6750.00 INR

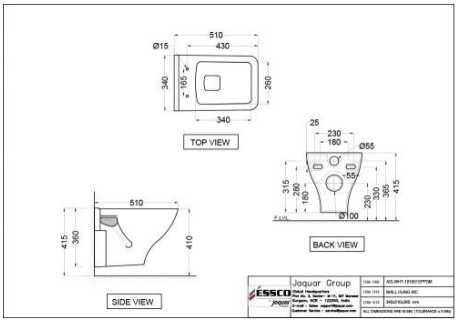



AIS-WHT-101551SSPPSM

EWC

Price: 4750.00 INR

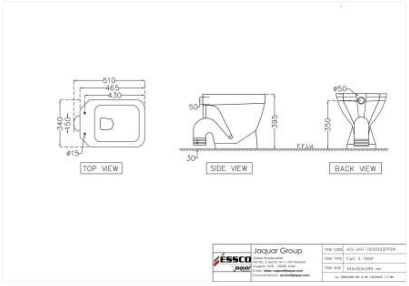

Aspire



AIS-WHT-101955P180SPPSM

Back To Wall WC

Price: 7350.00 INR

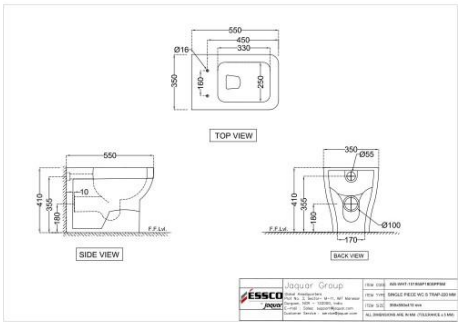



AIS-WHT-101851S220SPPSM

Single Piece WC

Price: 13300.00 INR

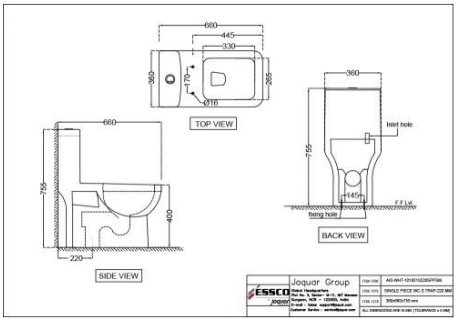



AIS-WHT-101351SPPSMZ

Bowl with Cistern for Extended Wall Hung WC

Price: 10500.00 INR

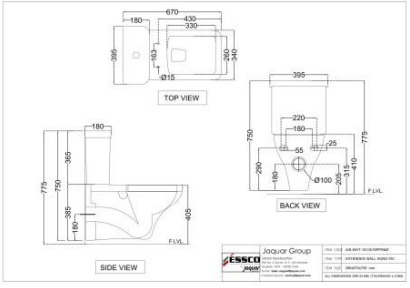

Aspire



AIS-WHT-101751S220SPPSMZ

Bowl with Cistern for Coupled WC

Price: 9450.00 INR

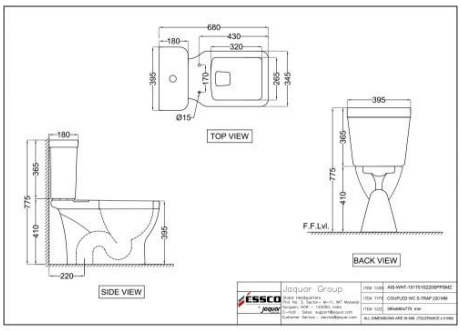



AIS-WHT-101751P180SPPSMZ

Bowl with Cistern for Coupled WC

Price: 9450.00 INR

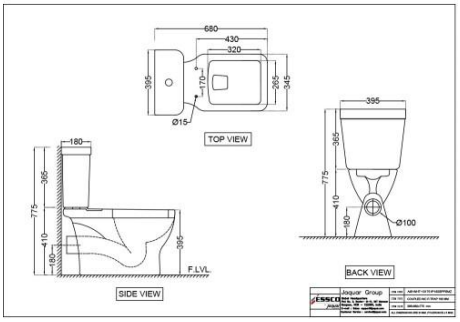



AIS-WHT-101853P180SPPSM

Rimless Single Piece WC

Price: 13800.00 INR

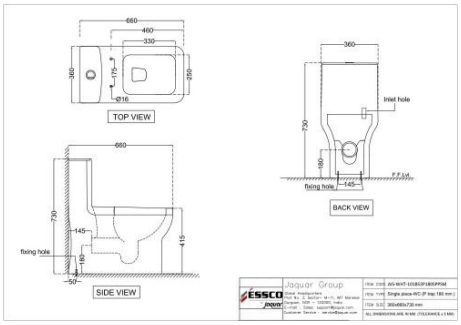



AIS-WHT-101853S220SPPSM

Rimless Single Piece WC

Price: 13800.00 INR

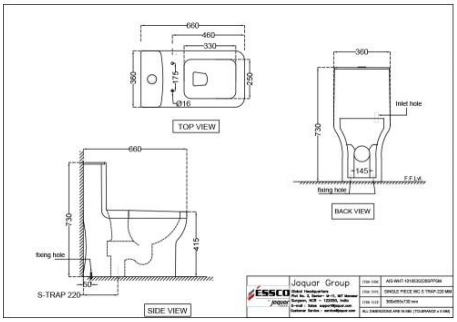



AIS-WHT-101853S300SPPSM

Rimless Single Piece WC

Price: 13800.00 INR

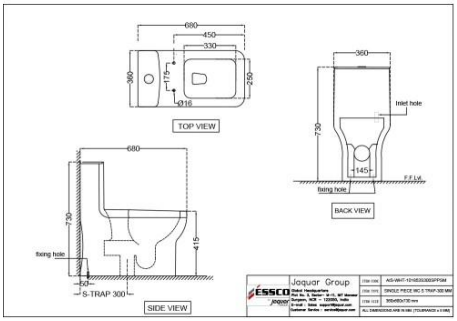



AIS-WHT-101151

Floor Mounted Bidet

Price: 6000.00 INR

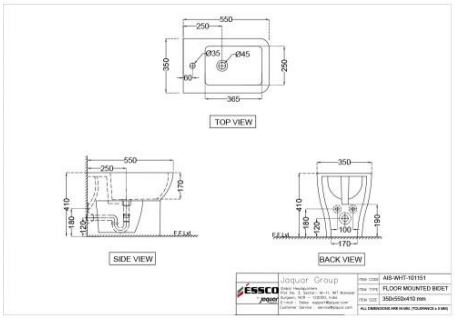

Aspire



AIS-WHT-101153

Wall Mounted Bidet

Price: 4850.00 INR

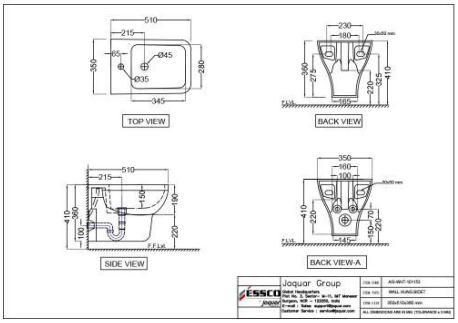



AIS-WHT-101901

Table Top Basin

Price: 3100.00 INR

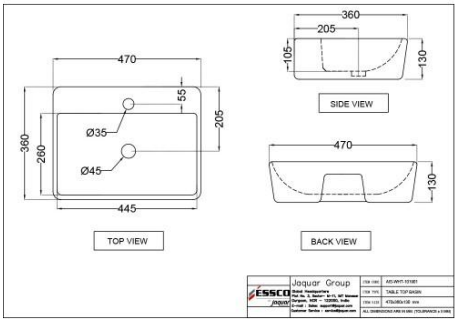



AIS-WHT-101903

Table Top Basin

Price: 3550.00 INR

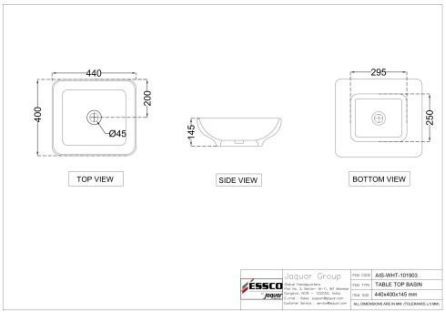

Aspire



AIS-WHT-101905

Table Top Basin

Price: 3150.00 INR

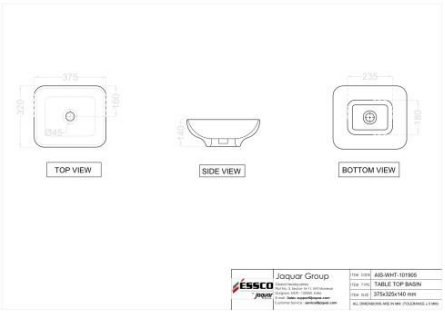



AIS-WHT-101701

Under Counter Basin

Price: 2550.00 INR

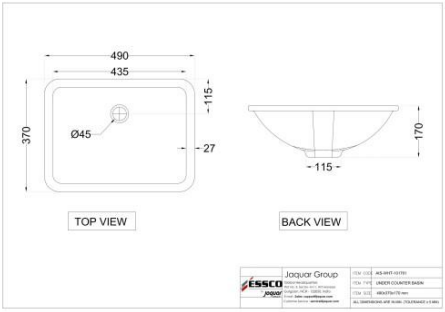



AIS-WHT-101301

Full Pedestal

Price: 1575.00 INR

Aspire



AIS-WHT-101801

Wall Hung Basin

Price: 2250.00 INR

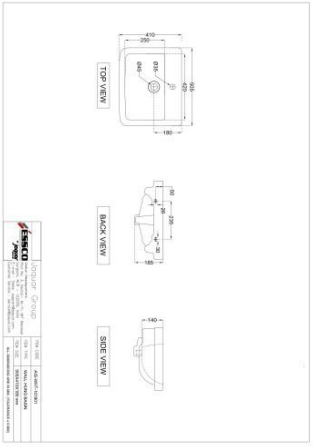

Disclaimer

- Jaquar reserves the right at its sole discretion, to change/modify/alter any product specification at any time without notice, where improvement can be effected in design, development and dimensions.
- Although the information shown in this catalogue is updated to the extent possible but the same may vary. It is advisable to consult our local representative or check in a period manner for latest technical and other updates.
- The prices are subject to change without notice and those ruling at the time of supply will be charged.
- Colours &sizes of product images shown in the Website may vary in reality