ÉSSCO BY Jaquar GROUP

ASPIRE





APR-CHR-101011NB

Single Lever Basin Mixer

Price: 3950.00 INR

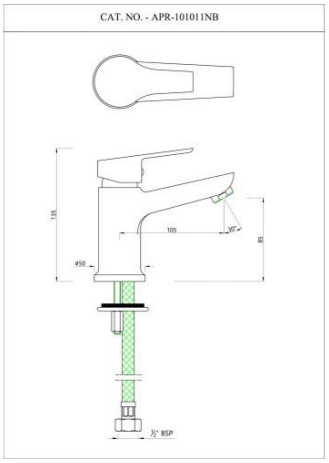



APR-CHR-101219

Wall Mixer Non-Telephonic Shower Arrangement

Price: 5100.00 INR

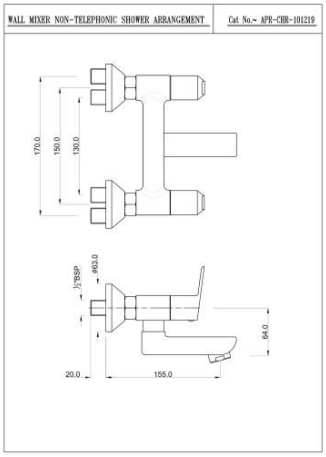



APR-CHR-101051B

Single Lever Basin Mixer with Popup Waste

Price: 4850.00 INR

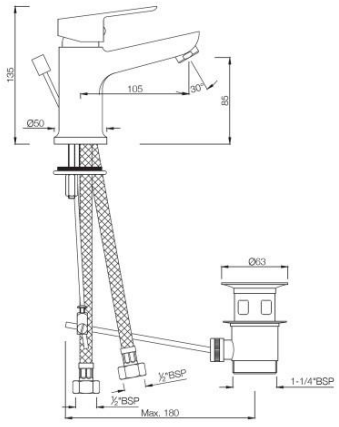



APR-CHR-101005NB

Single Lever Tall Boy

Price: 5400.00 INR

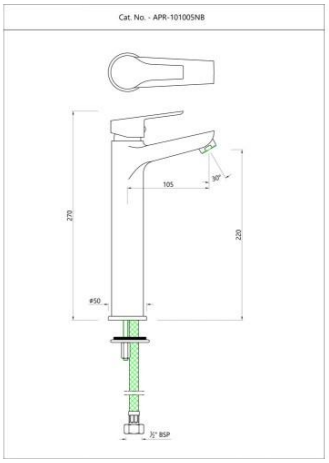



APR-CHR-101055NK

Exposed Parts Kit of Single Lever Divertor

Price: 725.00 INR

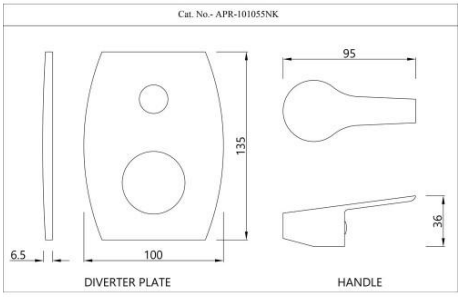



APR-CHR-101233K

Exposed Part Kit of Single Lever Basin Mixer Wall Mounted

Price: 1825.00 INR

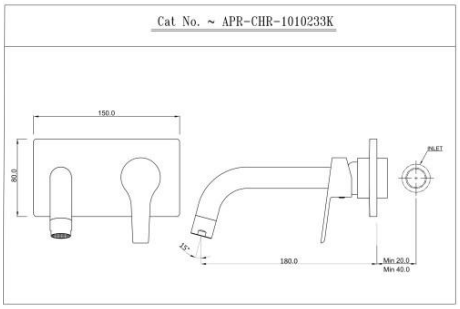



APR-CHR-101119

Single Lever Wall Mixer

Price: 6000.00 INR

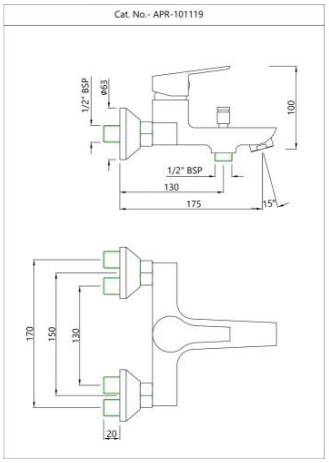



APR-CHR-101149

Single Lever Exposed Shower Mixer

Price: 4600.00 INR

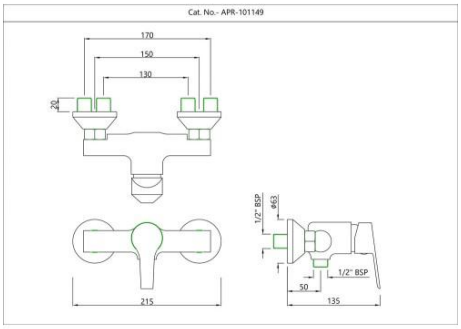



APR-CHR-101213B

Single Lever 1-Hole Bidet Mixer

Price: 4850.00 INR

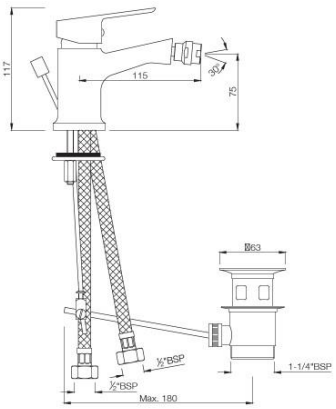

Aspire



APR-CHR-101001M

Pillar cock

Price: 2300.00 INR

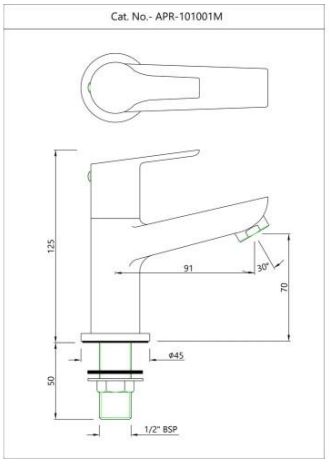



APR-CHR-101021M

Pillar cock

Price: 3450.00 INR

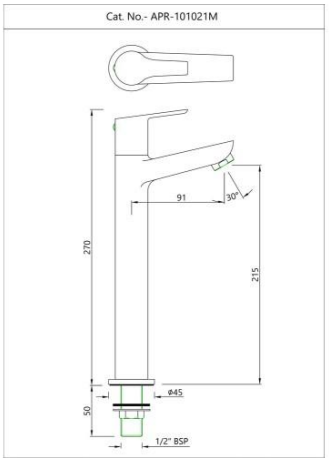



APR-CHR-101123

Swan Neck Tap

Price: 2550.00 INR

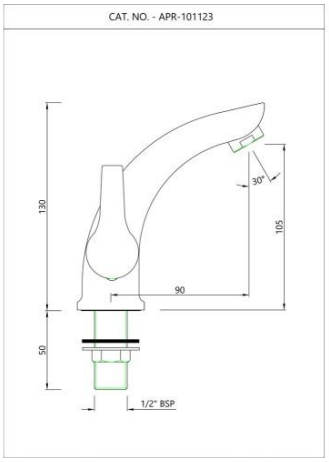

Aspire



APR-CHR-101127

Swan Neck Tap

Price: 2550.00 INR

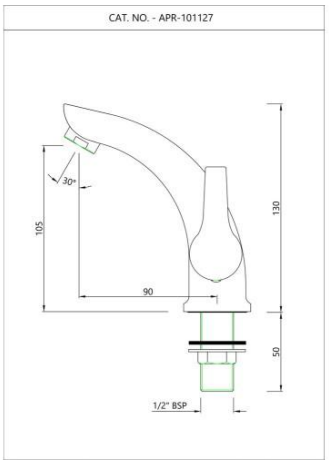



APR-CHR-101273

Wall Mixer

Price: 7100.00 INR

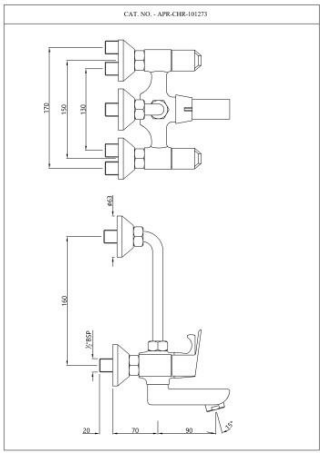



APR-CHR-101281

Wall Mixer

Price: 7850.00 INR

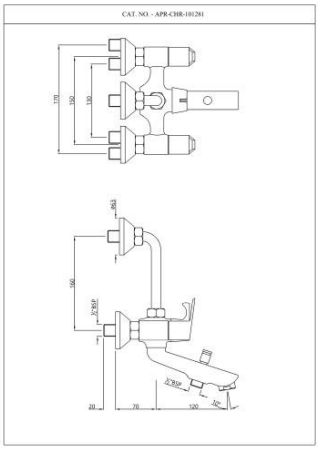

Aspire



APR-CHR-101309N

Sink Mixer with Swinging Spout

Price: 4500.00 INR

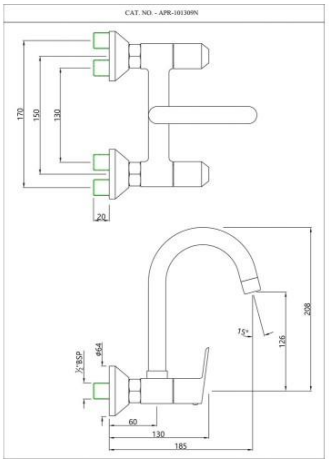



APR-CHR-101357

Sink Cock

Price: 2575.00 INR

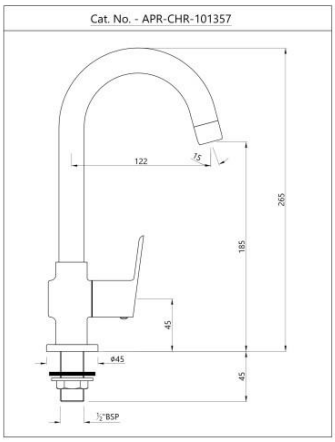



APR-CHR-101347N

Sink Cock

Price: 2075.00 INR

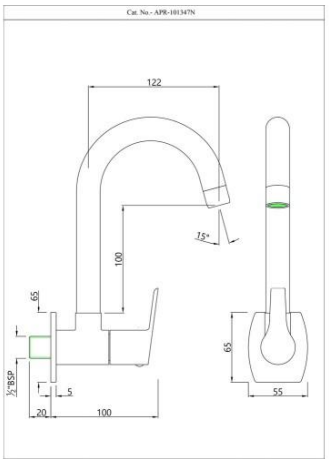



APR-CHR-101037

Bib Cock

Price: 1575.00 INR

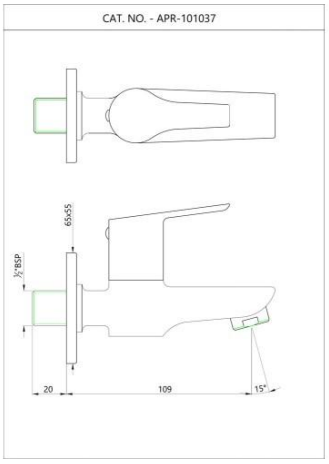



APR-CHR-101041

2-Way Bib Cock

Price: 1800.00 INR

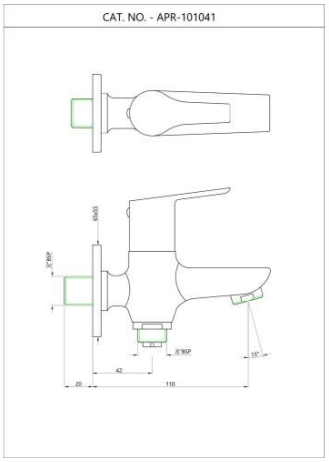



APR-CHR-101107

Long Body Bib Cock

Price: 1900.00 INR

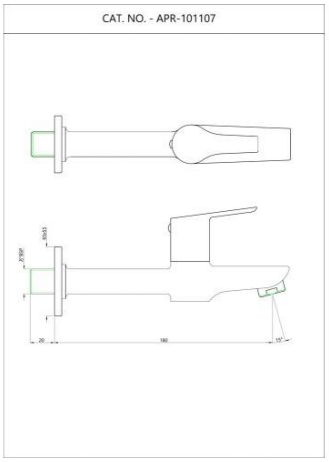

Aspire



APR-CHR-101053

Angular Stop Cock

Price: 1100.00 INR

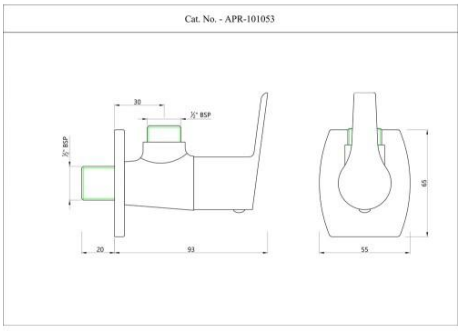



APR-CHR-101067

2-Way Angular Stop Cock

Price: 1975.00 INR

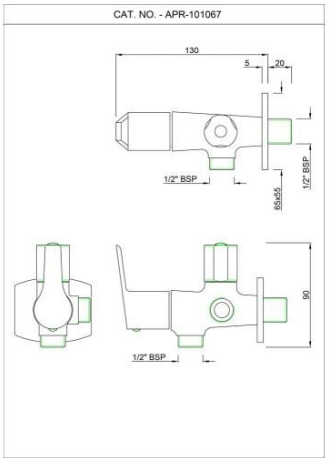



APR-CHR-101057

Angular Stop Cock

Price: 850.00 INR

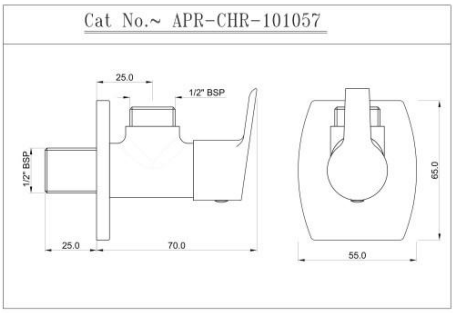

Aspire



APR-CHR-101069K

Concealed Stop Cock

Price: 550.00 INR

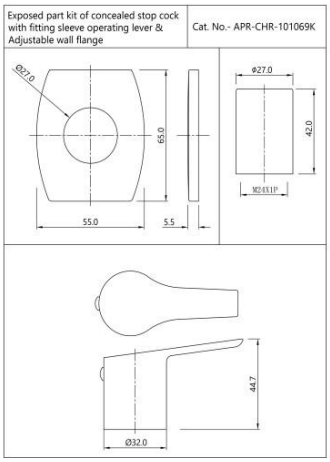



APR-CHR-101081

Flush Cock

Price: 3150.00 INR

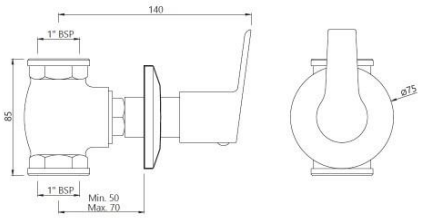



SPE-CHR-101429

Aspire Bath Tub Spout

Price: 1650.00 INR

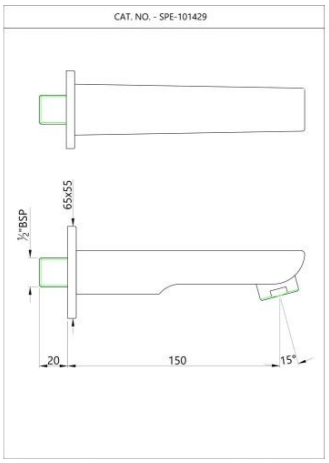

Aspire



SPE-CHR-101463

Aspire Bath Tub Spout

Price: 2350.00 INR

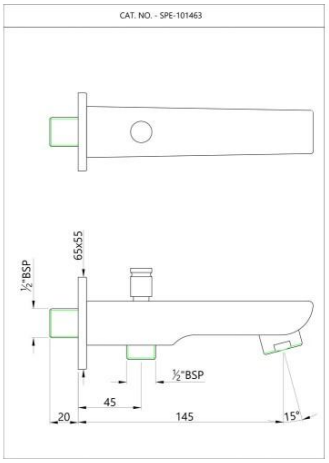

Disclaimer

- Jaquar reserves the right at its sole discretion, to change/modify/alter any product specification at any time without notice, where improvement can be effected in design, development and dimensions.
- Although the information shown in this catalogue is updated to the extent possible but the same may vary. It is advisable to consult our local representative or check in a period manner for latest technical and other updates.
- The prices are subject to change without notice and those ruling at the time of supply will be charged.
- Colours &sizes of product images shown in the Website may vary in reality